SERVICE BULLETIN

Original Issue Date: **10/97**
Model: **200-800 kW**
Market: **Industrial**
Subject: **Block Heater Control Box Wiring Diagrams**

This service bulletin provides service technicians with the wiring diagrams for block heaters with the new control box.

Redesigned block heater control boxes (354315 and 354316) eliminate water entry into the control box.

Use the following wiring diagrams for servicing 120-240 Volt and 208-480 Volt engine block heaters.

Applicable block heater installation instructions will have the new wiring diagrams added at next revision.

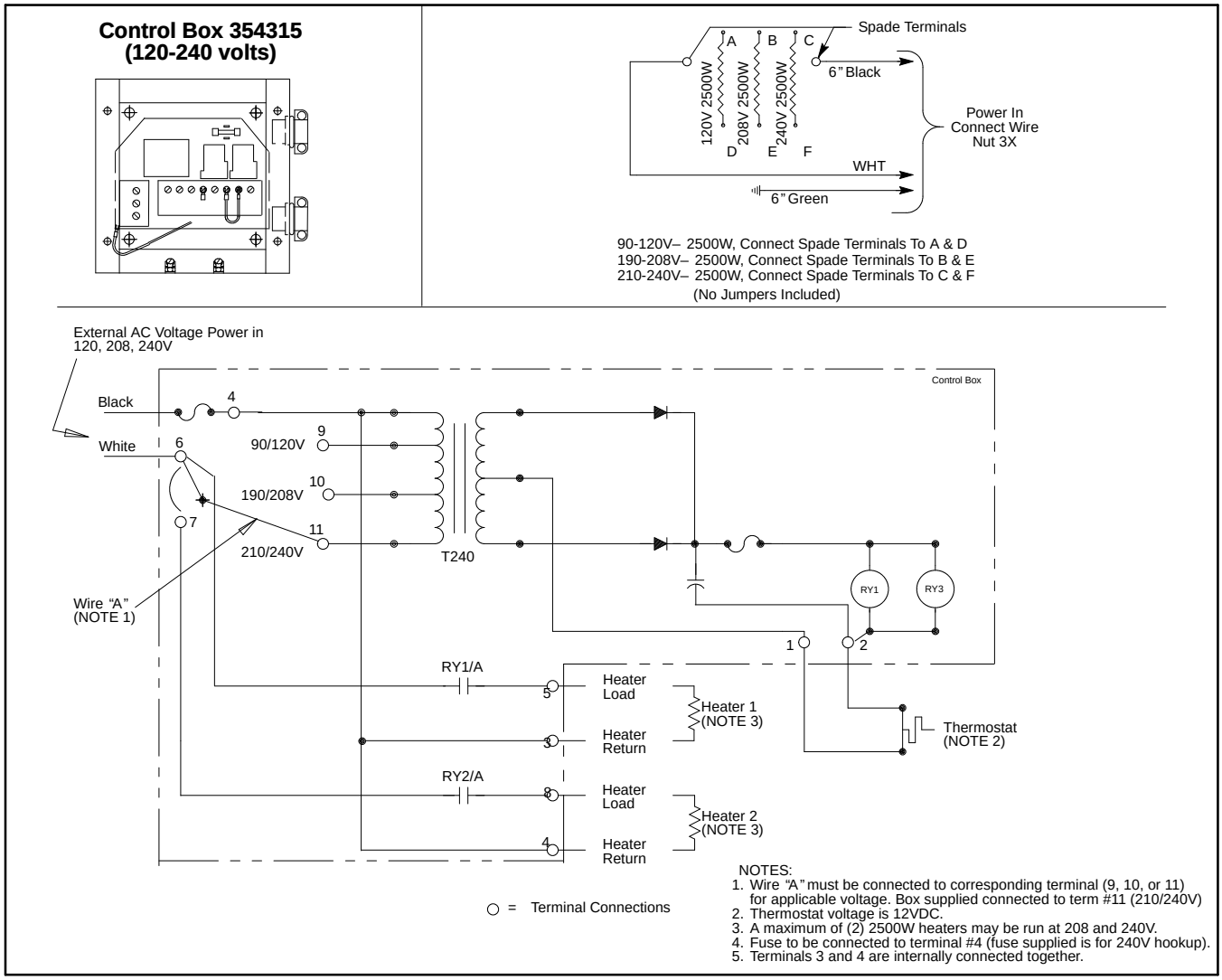

Figure 1. 120-240 Volt Control Box and Block Heater Wiring Diagrams

Routing	Service Manager	Sales Manager	Parts Manager	Technician No. 1	Technician No. 2	Technician No. 3	Return This to
Initial Here							

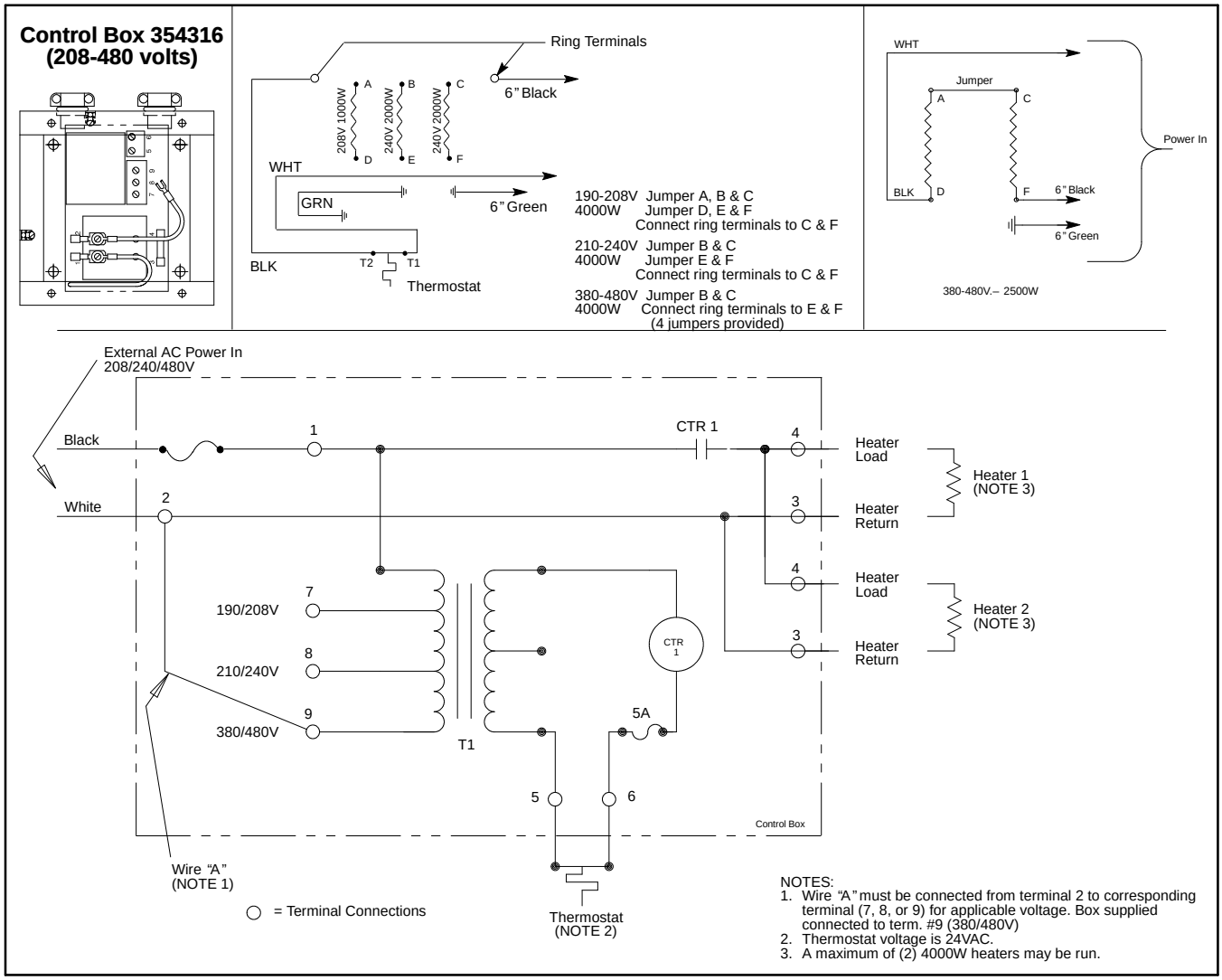

Figure 2. 208-480 Volt Control Box and Block Heater Wiring Diagrams