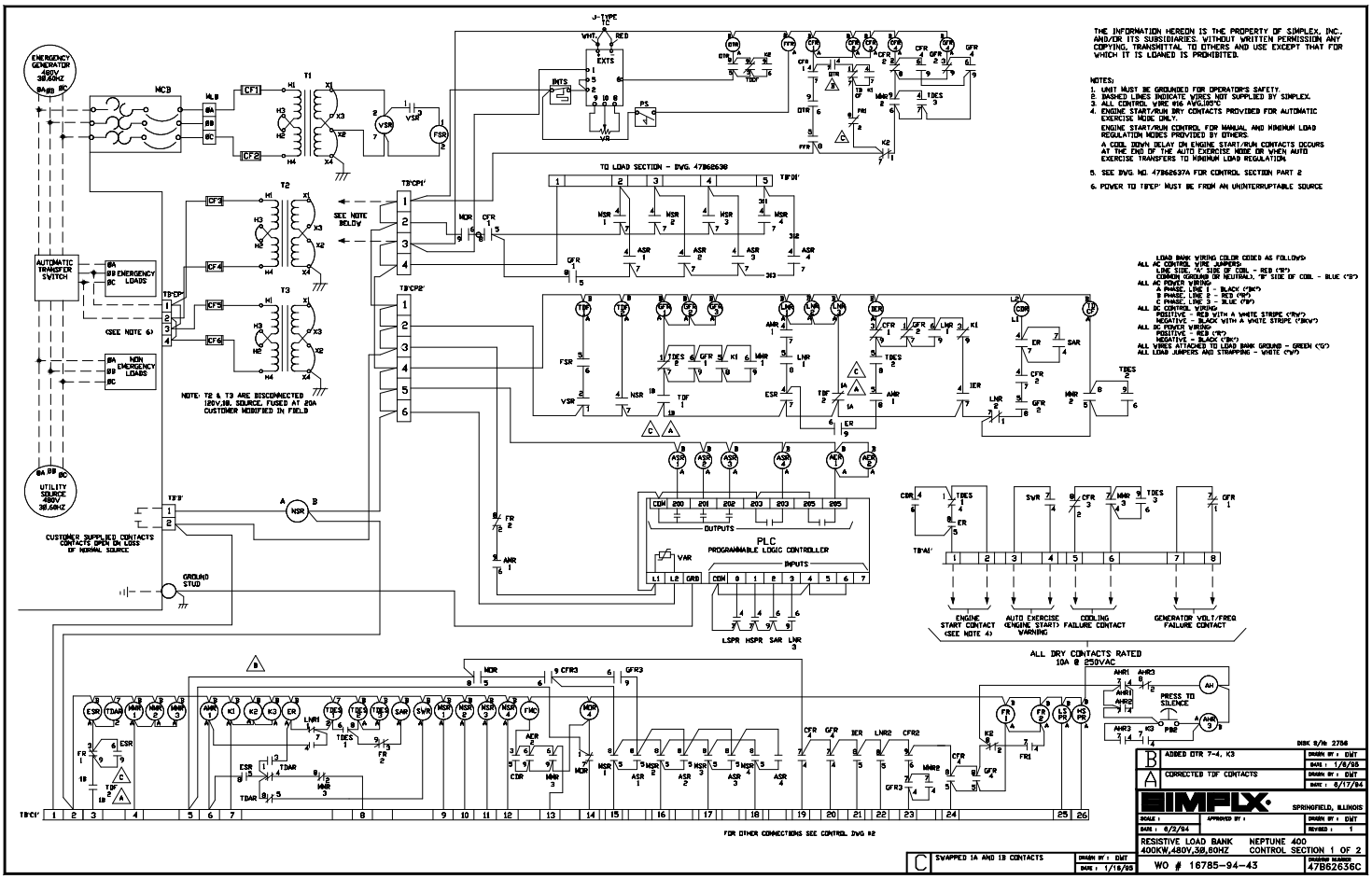
THE INFORMATION HEREON IS THE PROPERTY OF SIMPLEX, INC. AND/OR ITS SUBSIDIARIES. WITHOUT WRITTEN PERMISSION ANY COPYING, TRANSMITTAL TO OTHERS AND USE EXCEPT THAT FOR WHICH IT IS LOANED IS PROHIBITED.
NOTES:
1. UNIT MUST BE GROUNDED FOR OPERATOR'S SAFETY.
2. DASHED LINES INDICATE WIRES NOT SUPPLIED BY SIMPLEX.
3. ALL CONTROL WIRE #16 AWG,105°C
4. ENGINE START/RUN DRY CONTACTS PROVIDED FOR AUTOMATIC EXERCISE MODE ONLY.
ENGINE START/RUN CONTROL FOR MANUAL AND MINIMUM LOAD REGULATION MODES PROVIDED BY OTHERS.
A COOL DOWN DELAY ON ENGINE START/RUN CONTACTS OCCURS AT THE END OF THE AUTO EXERCISE MODE OR WHEN AUTO EXERCISE TRANSFERS TO MINIMUM LOAD REGULATION.
5. SEE DWG NO. 47862637A FOR CONTROL SECTION PART 2
6. POWER TO TB'EP' MUST BE FROM AN UNINTERRUPTABLE SOURCE
LOAD BANK WIRING COLOR CODED AS FOLLOWS
ALL AC CONTROL WIRE JUMPERS
LINE SIDE "A" SIDE OF COIL - RED ("R")
COMMON (GROUND OR NEUTRAL) "B" SIDE OF COIL - BLUE ("B")
ALL AC POWER WIRING
A PHASE, LINE 1 - BLACK ("BK")
B PHASE, LINE 2 - RED ("R")
C PHASE, LINE 3 - BLUE ("B")
ALL DC CONTROL WIRING
POSITIVE - RED WITH A WHITE STRIPE ("RW")
NEGATIVE - BLACK WITH A WHITE STRIPE ("BKW")
ALL DC POWER WIRING
POSITIVE - RED ("R")
NEGATIVE - BLACK ("BK")
ALL WIRES ATTACHED TO LOAD BANK GROUND - GREEN ("G")
ALL LOAD JUMPERS AND STRAPPING - WHITE ("W")
EMERGENCY GENERATOR 480V 38.60HZ
UTILITY SOURCE 480V 38.60HZ
AUTOMATIC TRANSFER SWITCH
EMERGENCY LOADS
NON EMERGENCY LOADS
(SEE NOTE 6)
NOTE: T2 & T3 ARE DISCONNECTED 120V,1Ø, SOURCE, FUSED AT 20A CUSTOMER MODIFIED IN FIELD
CUSTOMER SUPPLIED CONTACTS CONTACTS OPEN ON LOSS OF NORMAL SOURCE
GROUND STUD
SEE NOTE BELOW
TO LOAD SECTION - DWG. 47862630
PLC
PROGRAMMABLE LOGIC CONTROLLER
OUTPUTS
INPUTS
ENGINE START CONTACT (SEE NOTE 4)
AUTO EXERCISE (ENGINE START) WARNING
COOLING FAILURE CONTACT
GENERATOR VOLT/FREQ FAILURE CONTACT
ALL DRY CONTACTS RATED 10A @ 250VAC
PRESS TO SILENCE
FOR OTHER CONNECTIONS SEE CONTROL DWG #2
B ADDED DTR 7-4, K3
A CORRECTED TDF CONTACTS
SIMPLEX
SPRINGFIELD, ILLINOIS
RESISTIVE LOAD BANK 400KW,480V,3Ø,60HZ
NEPTUNE 400 CONTROL SECTION 1 OF 2
WO # 16785-94-43
47862636C
C SWAPPED 1A AND 1B CONTACTS