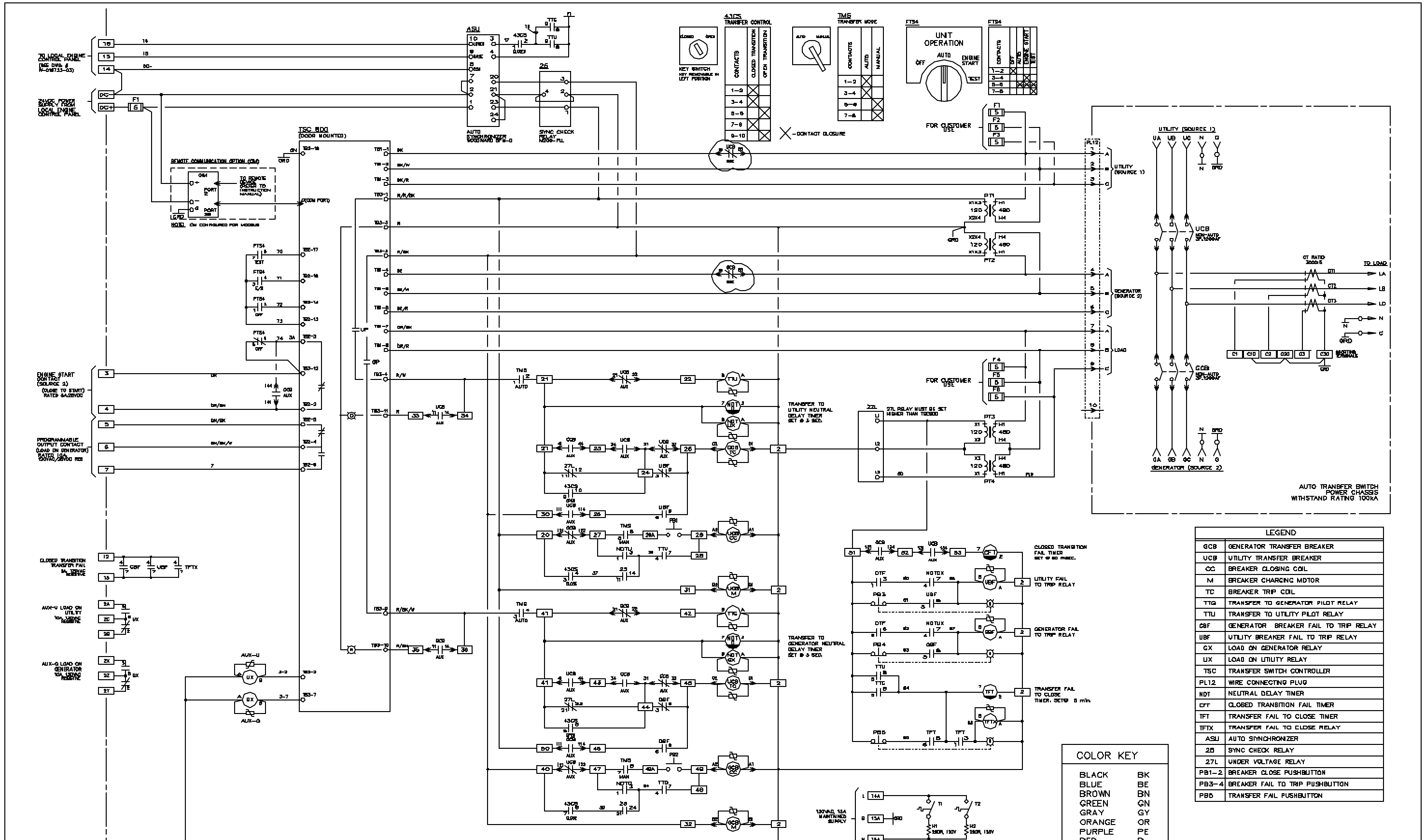

NOTE: SYSTEM MUST UTILIZE A SOLIDLY GROUNDED NEUTRAL

LEGEND	
GCB	GENERATOR TRANSFER BREAKER
UCB	UTILITY TRANSFER BREAKER
CC	BREAKER CLOSING COIL
M	BREAKER CHARGING MOTOR
TC	BREAKER TRIP COIL
TTG	TRANSFER TO GENERATOR PILOT RELAY
TTU	TRANSFER TO UTILITY PILOT RELAY
GBF	GENERATOR BREAKER FAIL TO TRIP RELAY
UBF	UTILITY BREAKER FAIL TO TRIP RELAY
GX	LOAD ON GENERATOR RELAY
UX	LOAD ON UTILITY RELAY
TSC	TRANSFER SWITCH CONTROLLER
PL12	WIRE CONNECTING PLUG
NDT	NEUTRAL DELAY TIMER
CFT	CLOSED TRANSITION FAIL TIMER
TFT	TRANSFER FAIL TO CLOSE TIMER
TFTX	TRANSFER FAIL TO CLOSE RELAY
ASU	AUTO SYNCHRONIZER
25	SYNC CHECK RELAY
27L	UNDER VOLTAGE RELAY
PB1-2	BREAKER CLOSE PUSHBUTTON
PB3-4	BREAKER FAIL TO TRIP PUSHBUTTON
PB5	TRANSFER FAIL PUSHBUTTON

COLOR KEY	
BLACK	BK
BLUE	BE
BROWN	BN
GREEN	GN
GRAY	GY
ORANGE	OR
PURPLE	PE
RED	R
WHITE	W
YELLOW	Y
SOLID/TRACER(S)	

REFER TO SHEET #

☐ APPROVED FOR CONSTRUCTION
☐ MASTER COPY ☐ REFERENCE COPY ____ OF ____
☐ MULTIPLE UNIT WORK ORDER
☐ RELEASED FOR INFORMATION
AUTH. BY: _____ DATE: _____

DRAWING No.	REFERENCE DRAWINGS

No.	REVISIONS	BY	AUTH	DATE
6	ADD TRIPPED CONT. TO TSC800 SENSING	SH	SH	04-01-26
5	ADDED FUSSES OR CUSTOMER USE	CZ	SD	03-04-06
4	AS BUILT	LR	SH	03-01-15
3	MODIFICATIONS FOR PRODUCTION.	RG	BS	02-12-18
2	CHANGE CT'S RATIO	CZ	SH	02-11-20

THOMSON TECHNOLOGY, POWER & CONTROL

AUTOMATIC TRANSFER SWITCH
MODEL TS 893-3000A-480V-CT
SCHEMATIC DIAGRAM
CRYSTAL PHOTONICS

DRAWINGS AND OR OTHER TECHNICAL INFORMATION SUPPLIED BY THOMSON TECHNOLOGY INC AS A PART OF A SALE OF EQUIPMENT ARE FOR THE PURCHASER'S USE SOLELY IN CONJUNCTION WITH THAT EQUIPMENT, UNLESS SPECIFICALLY AGREED TO OTHERWISE AS A PART OF THE TERMS OF SALE.

CUSTOMER FLORIDA POWER

ORDER No.	WORK ORDER No.		
C-017559	W-018738		
DRAWN BY	AUTH BY	DATE	REV
CZ	SH	02-10-31	6
DRAWING/FILE No.		SHEET	
W-018738-02		2/3	

FORM CAD No. ESHT

04/02/05 1:24:24 PM